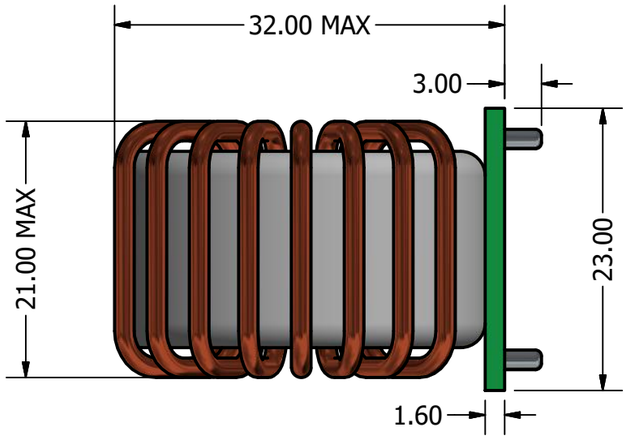

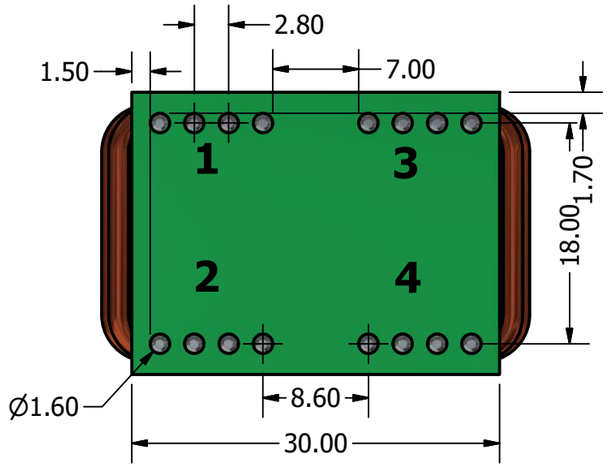

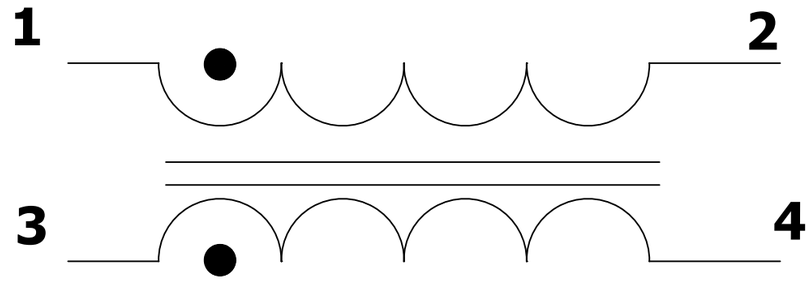

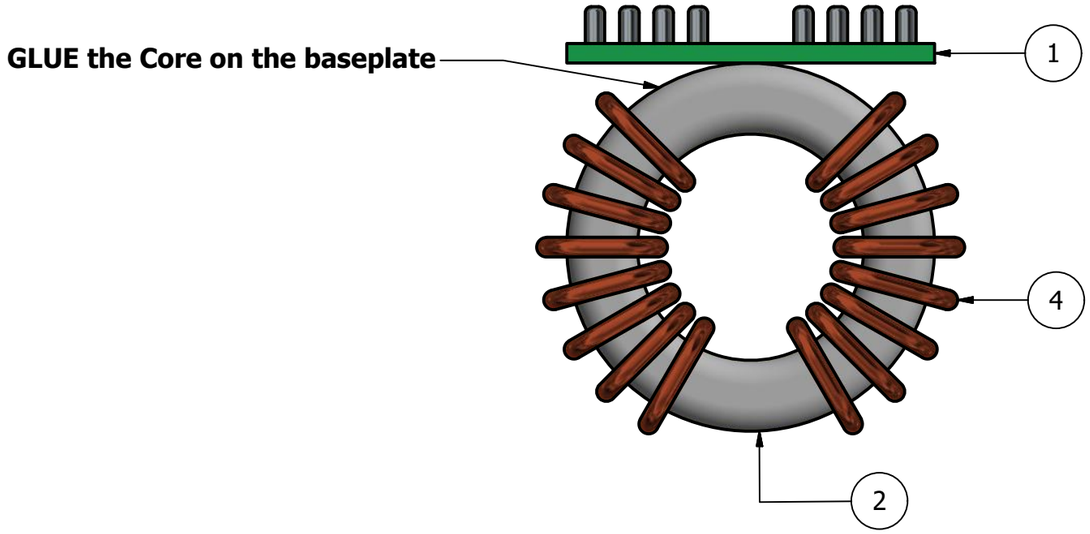

Magnetic specification	
Strands	Turns
4 Strands	3 turns

PARTS LIST			
ITEM	QTY	PART NUMBER	DESCRIPTION
1	1	MG10000850 CM choke	Base plate FR4 1.6mm
2	1	Core	B64290L0647X038
4	2	Copperwire 1.6mm	

DRAWN schmoelb	16.11.2018	Infineon Technologies Austria AG
CHECKED		TITLE: MG10000850 CM Choke
QA		
MFG		
APPROVED		

SIZE		DWG NO	REV
A3		MG10000850 CM Choke	1.0

SCALE 2 : 1 SHEET 1 OF 1